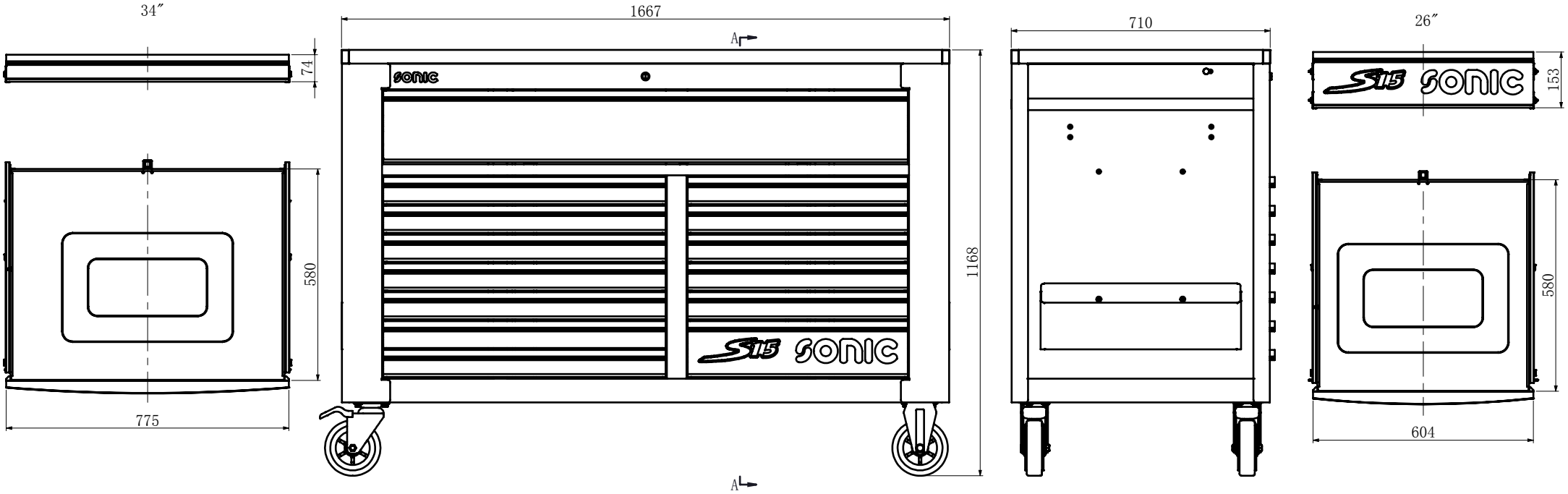
34″
74
580
775
1667
A
SONIC
SONIC
1168
A
710
26″
153
SONIC
580
604

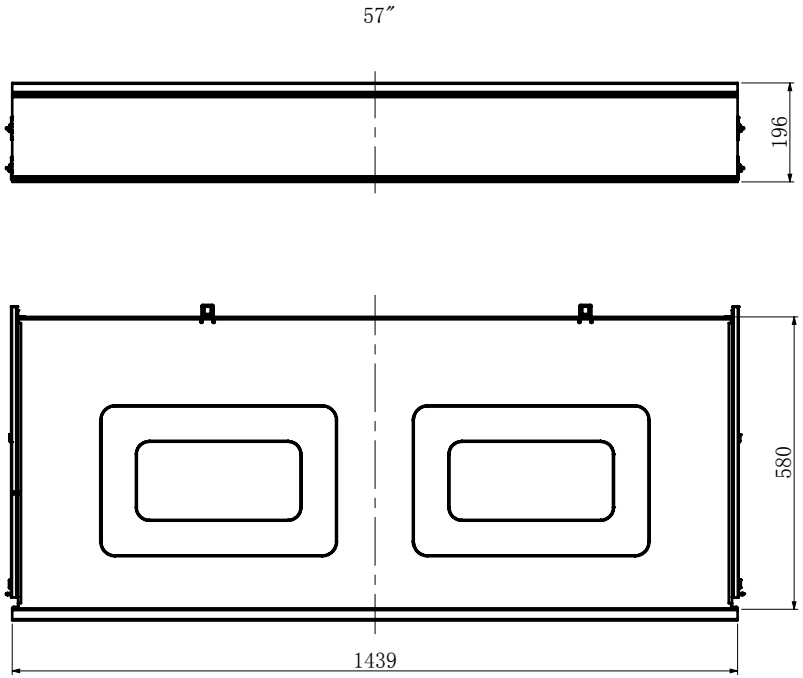
57″
196
580
1439

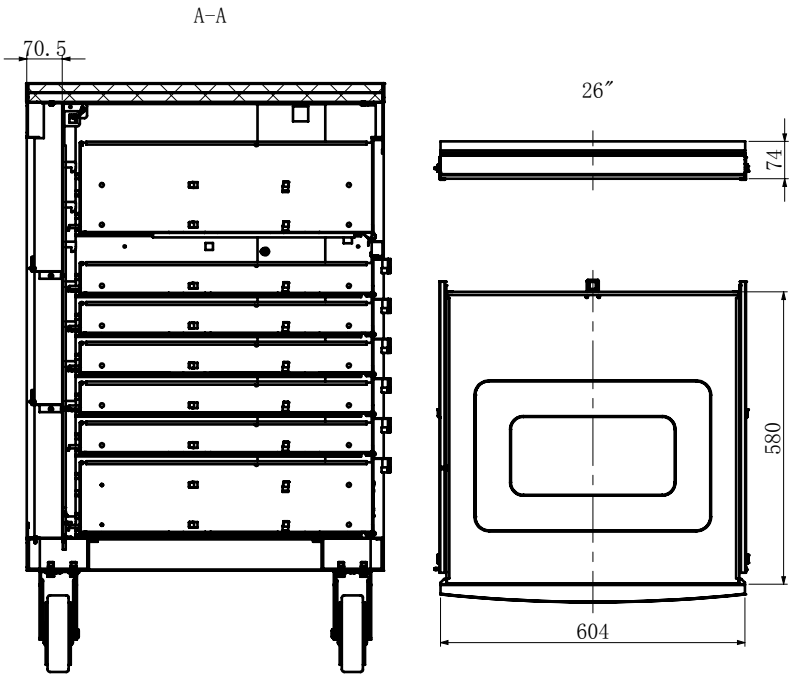
A-A
70.5
26″
74
580
604
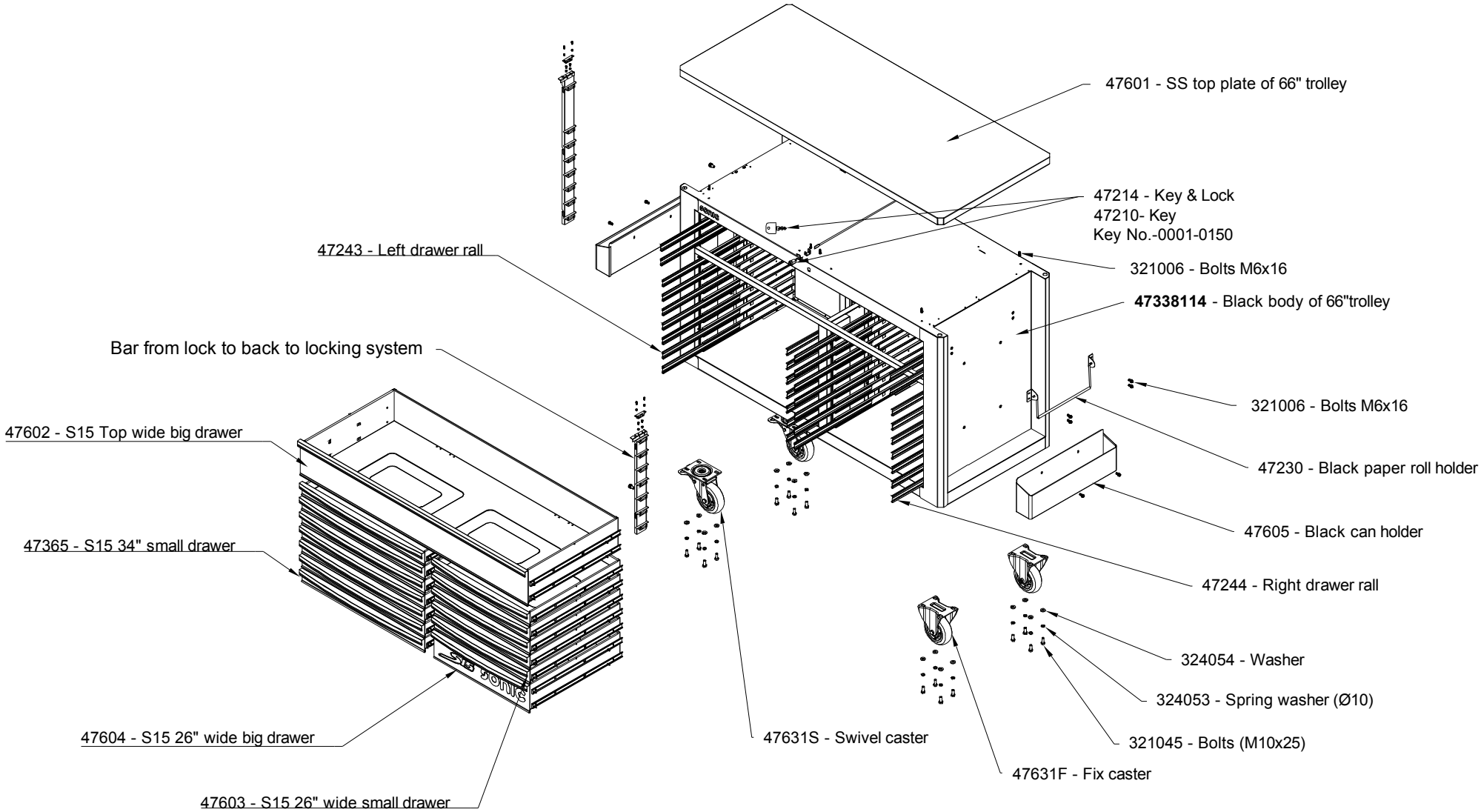
47338114 - Empty Trolley(black) S15