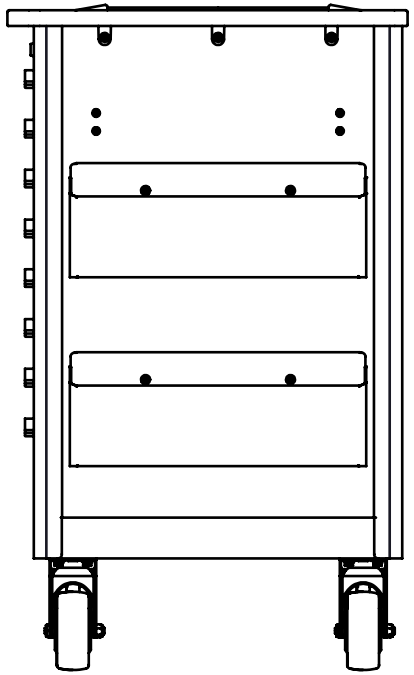

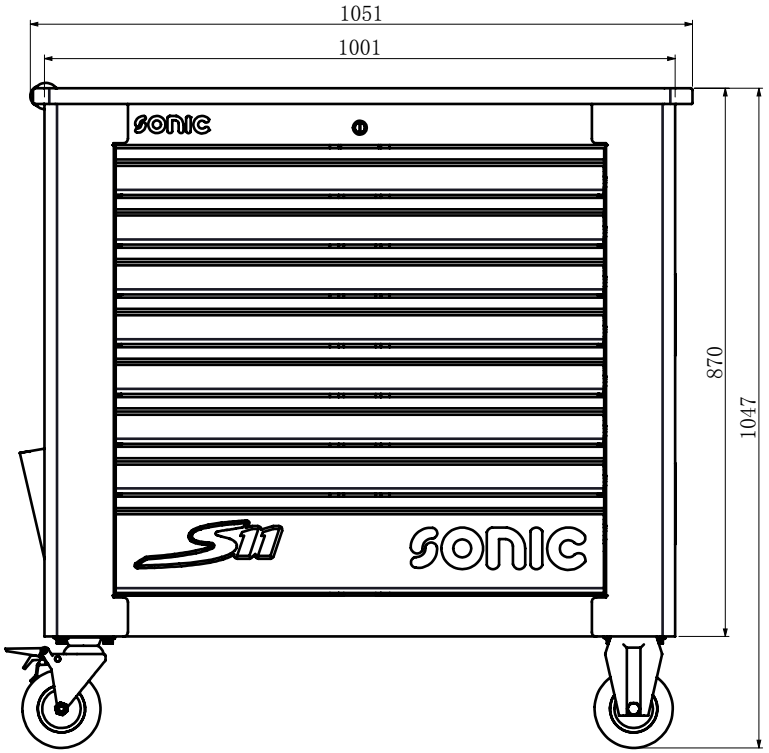
1051
1001
870
1047
SONIC
SONIC

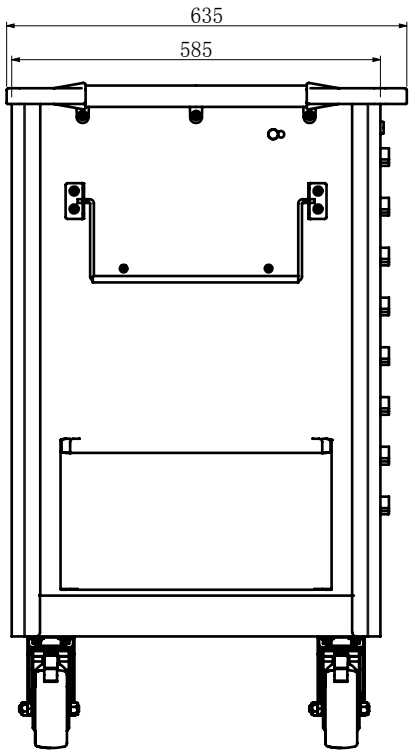
635
585
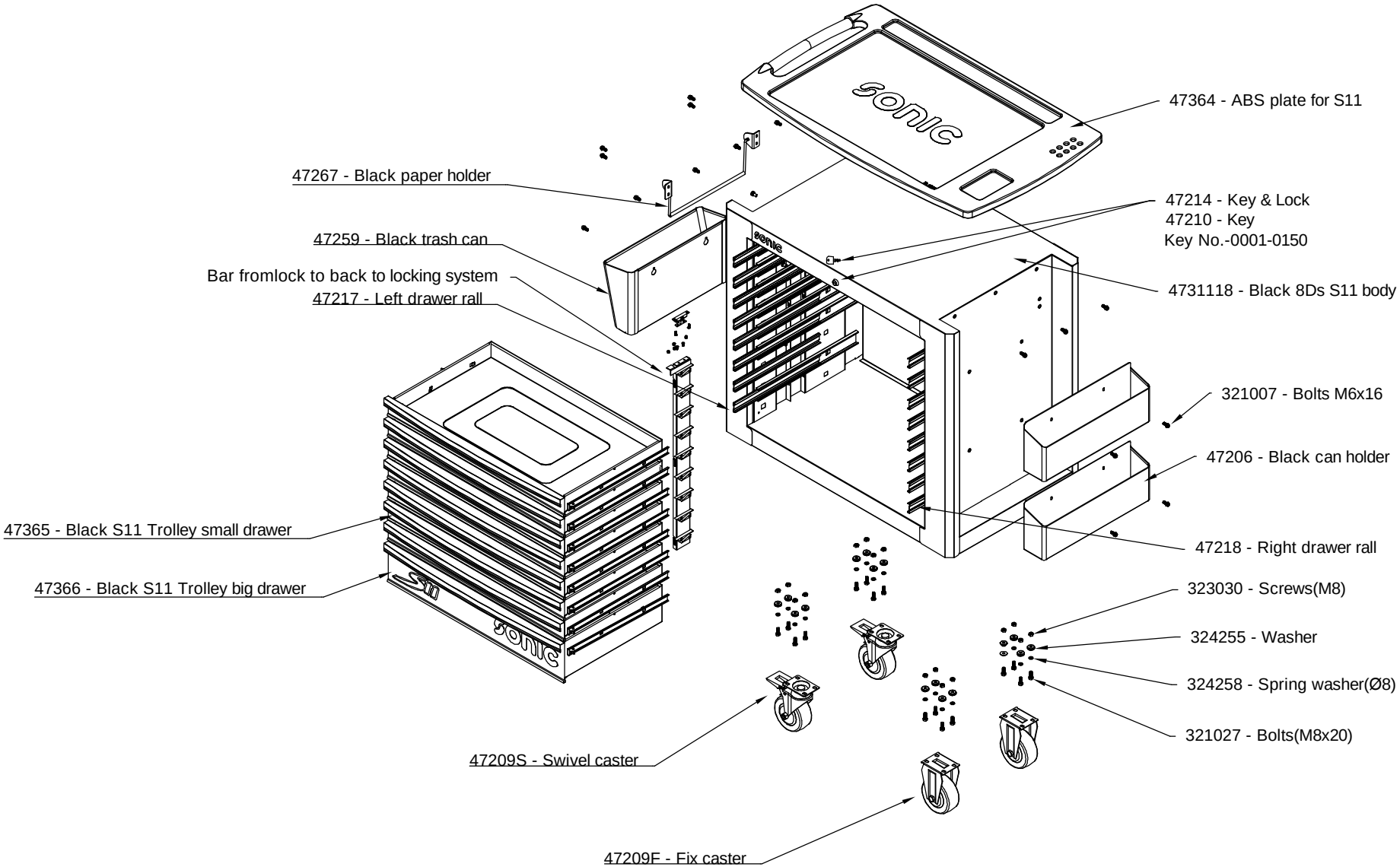
4731118 - 8DS S11 Trolley(black)