4730918 - 8DS S10 Trolley(black)

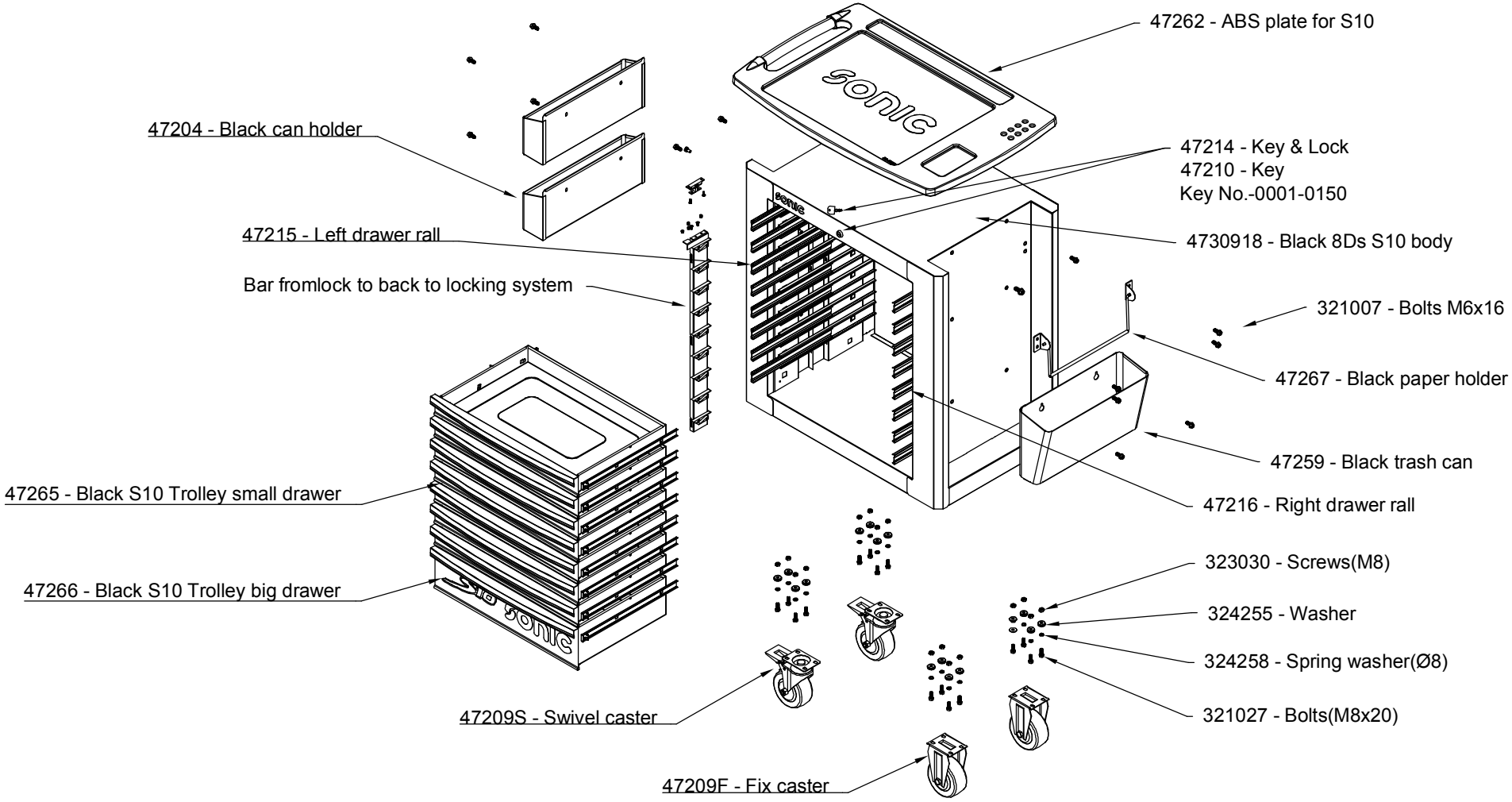

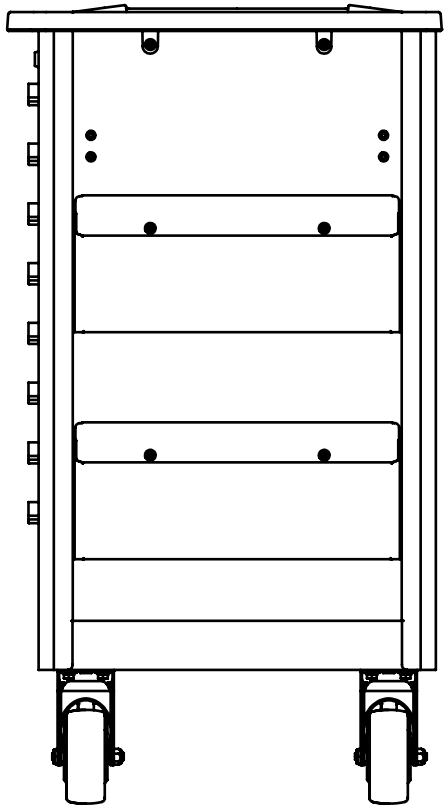

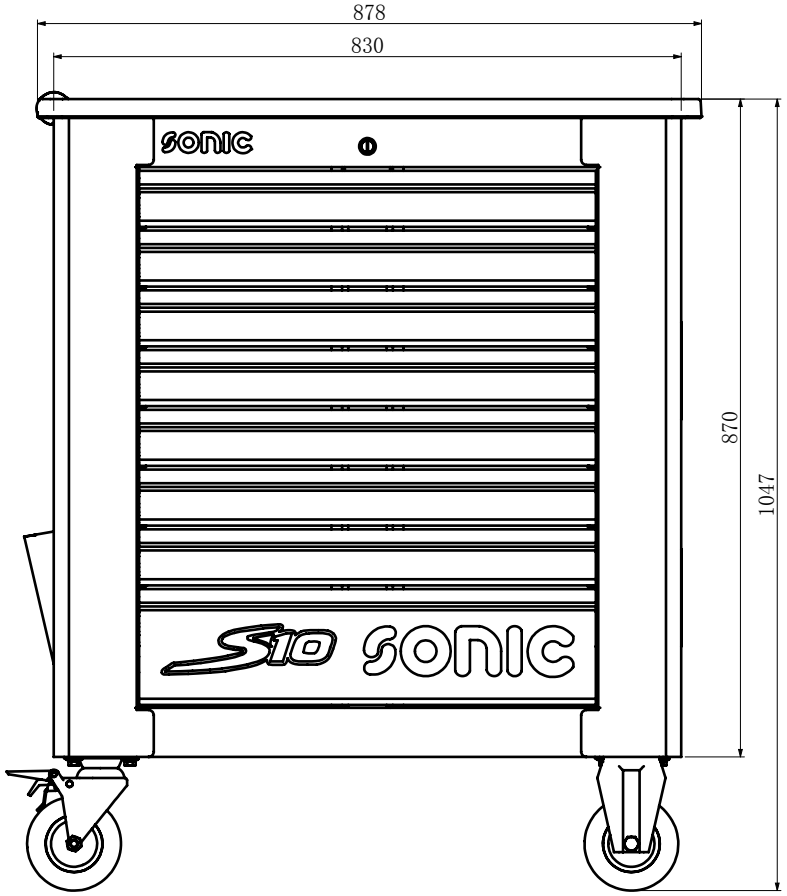
878
830
870
1047
SONIC
S10 SONIC

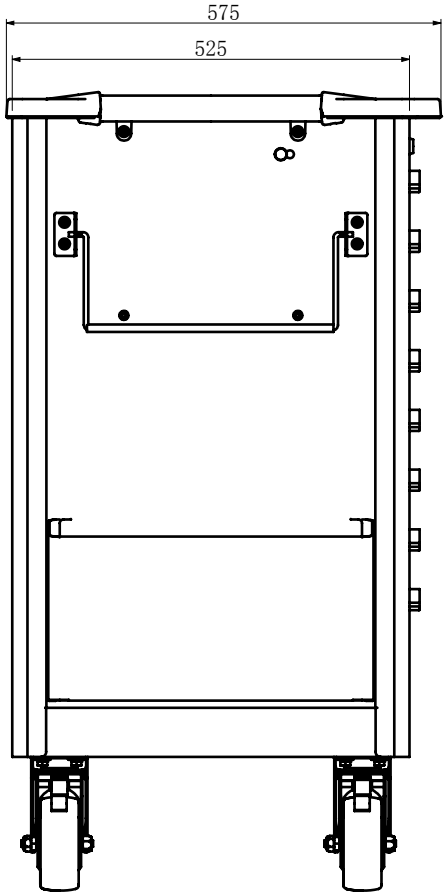
575
525